ITEM NO.	PART NUMBER	DESCRIPTION	QTY.
1	90-374	INDOOR EPOXY	1
2	CU-405	COPPER CONDUCTOR	1

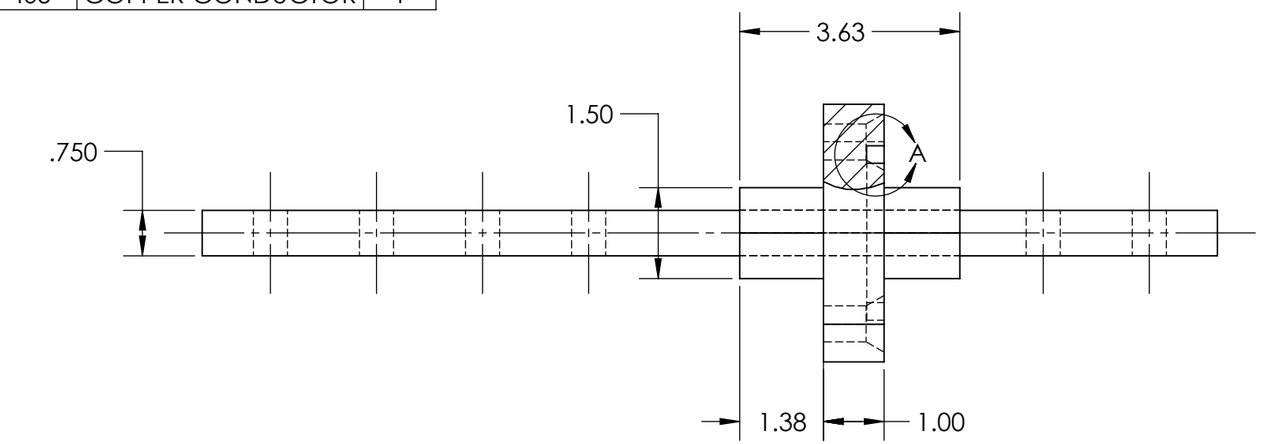

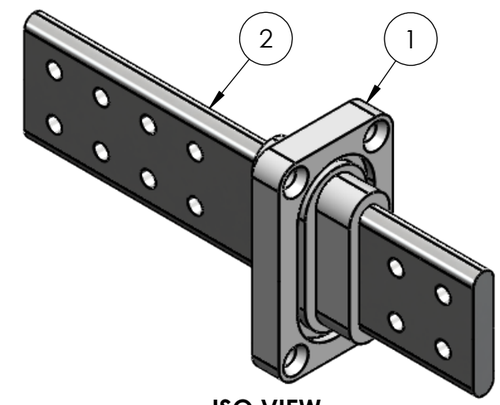

ISO VIEW

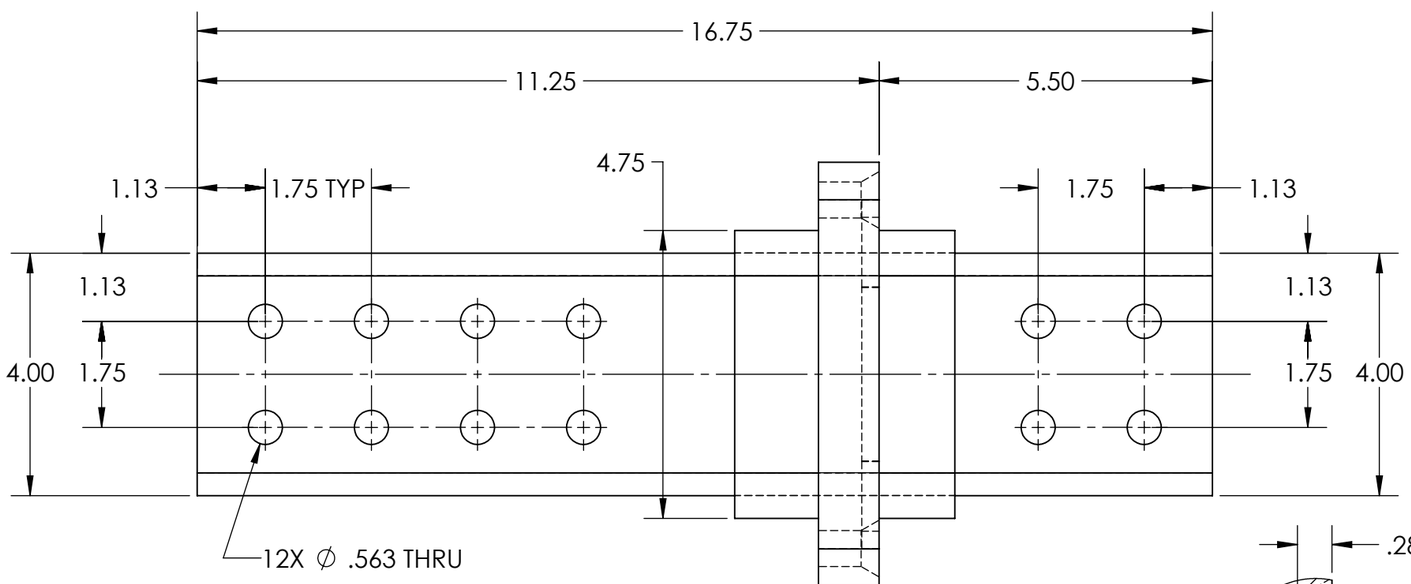

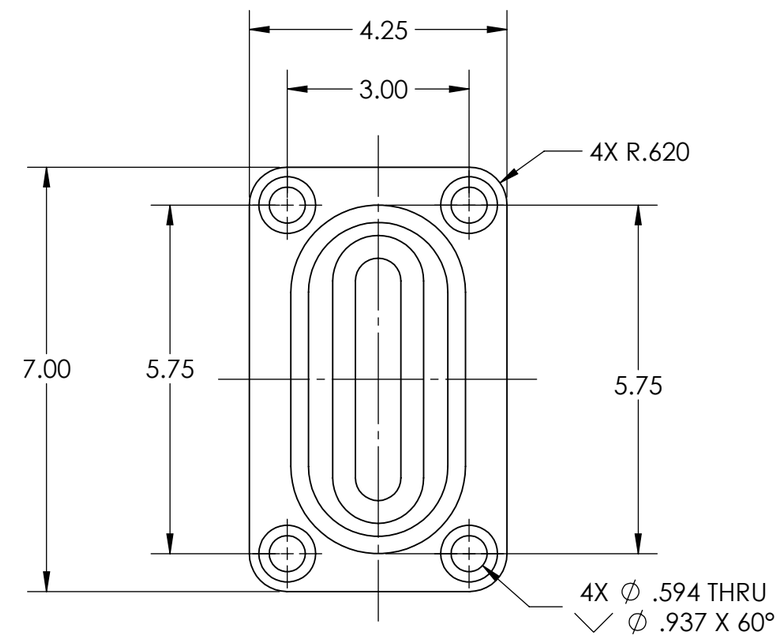

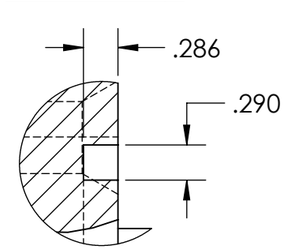

DETAIL A
SCALE 4 : 5

SPECIFICATIONS	
CURRENT RATE	2800 A
VOLTAGE CLASS	1.2 kV
B.I.L.	30 kV
TANK OPENING	4.85" X 1.62" MIN
PLATING	TIN
GASKET	AC86-269

UNLESS OTHERWISE SPECIFIED:
DIMENSIONS ARE IN INCHES
TOLERANCES:
ANGULAR: ±0.5°
TWO PLACE DECIMAL ±0.05
THREE PLACE DECIMAL ±0.005
THIRD ANGLE PROJECTION

PROPRIETARY TECHNICAL INFORMATION TO BE MAINTAINED IN CONFIDENCE AND NOT DISCLOSED TO ANY THIRD PARTY.

CROSSLINK TECHNOLOGY INC.

TITLE: **LV BUSHING**

SIZE	DWG. NO.	REV
B	**90-374**	**2**

DATE: 15JUL2023	BY: R.W	APPD: A.S	SCALE: 2:5	SHEET 2 OF 2