ITEM NO.	PART NUMBER	DESCRIPTION	QTY.
1	CU-336	COPPER CONDUCTOR	1
2	16C08O60336	OUTDOOR EPOXY	1

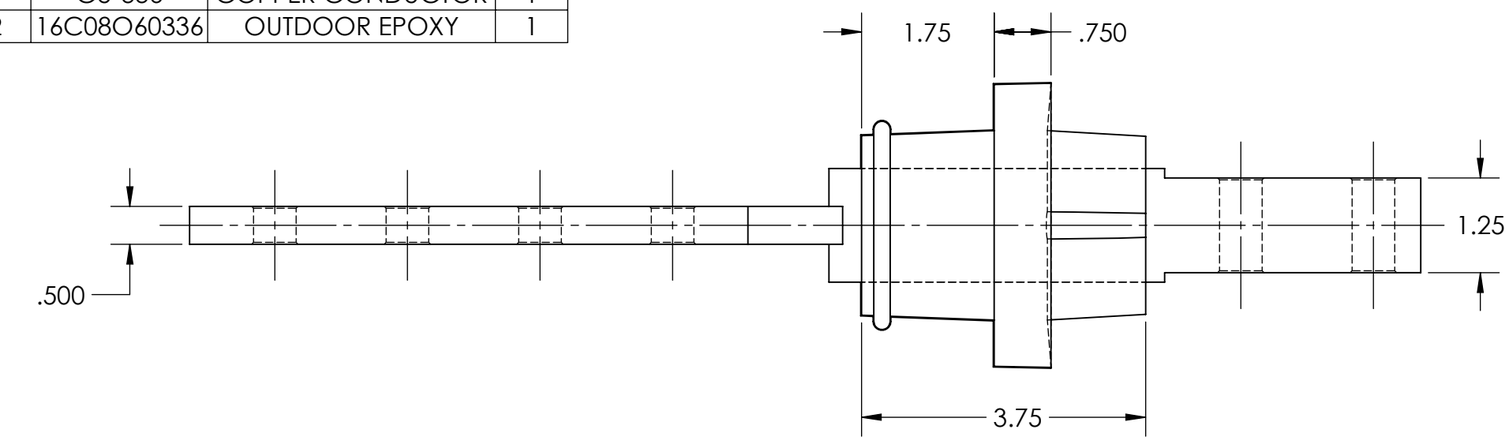

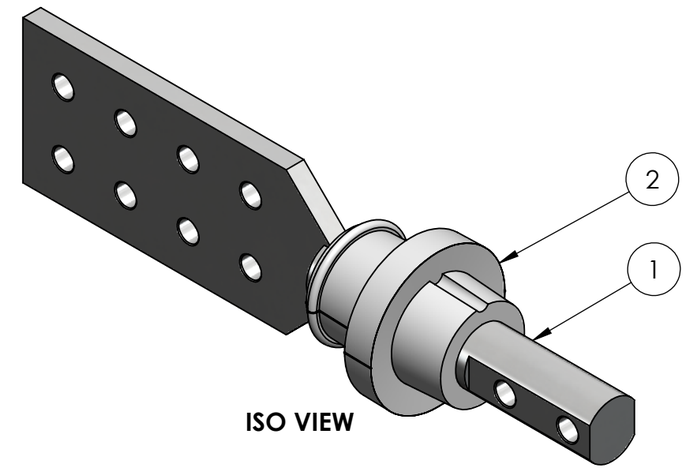

ISO VIEW

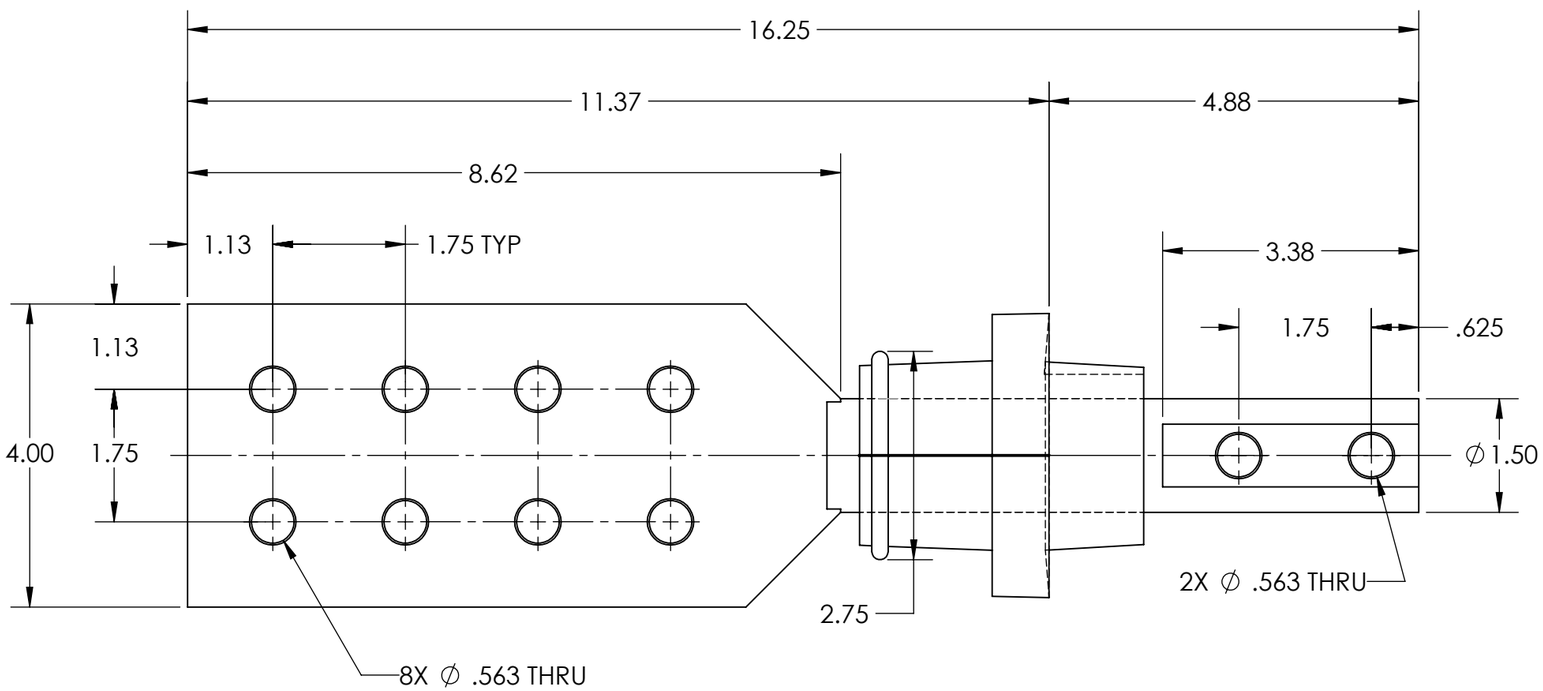

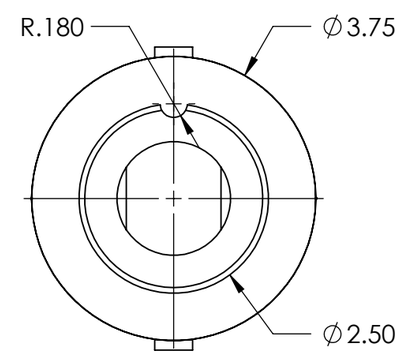

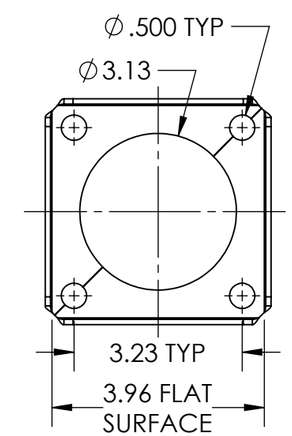

2PCS MOUNTING PLATE(MP-102)

SPECIFICATIONS	
CURRENT RATE	1600 A
VOLTAGE CLASS	1.2 kV
B.I.L.	30/45 kV*
TANK OPENING	2.56" MIN
PLATING	TIN
GASKET	AC86-229
MOUNTING PLATE	MP-102

* NOTE: 1.2kV CLASS BUSHING WILL PASS 45kV B.I.L. DEPENDING ON MOUNTING ARRANGEMENT.

UNLESS OTHERWISE SPECIFIED:
DIMENSIONS ARE IN INCHES
TOLERANCES:
ANGULAR: ±0.5°
TWO PLACE DECIMAL ±0.05
THREE PLACE DECIMAL ±0.005
THIRD ANGLE PROJECTION

PROPRIETARY TECHNICAL INFORMATION TO BE MAINTAINED IN CONFIDENCE AND NOT DISCLOSED TO ANY THIRD PARTY.

CROSSLINK TECHNOLOGY INC.

TITLE: **LV BUSHING SERIES**

SIZE	DWG. NO.	REV
B	16C08O60336	2

DATE: 29NOV2023 | BY: R.W | APPD: A.S | SCALE: 1:2 | SHEET 2 OF 2